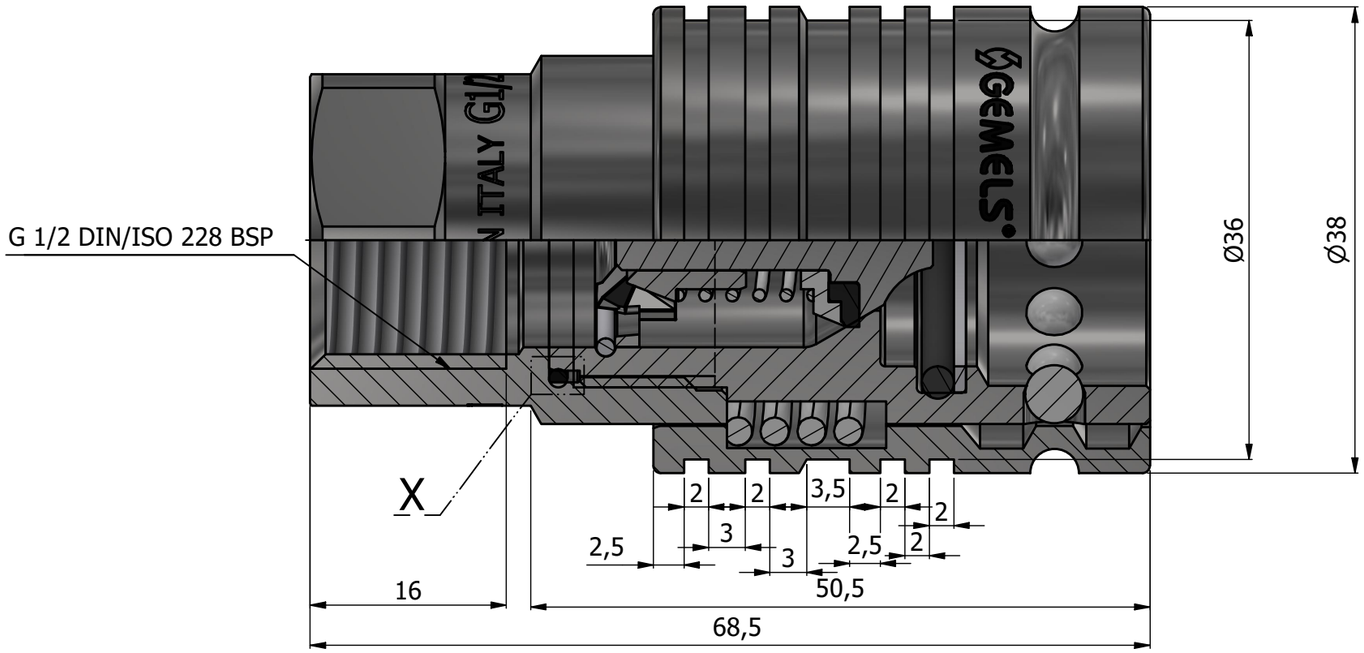

DETTAGLIO **"X"**
(4 : 1)

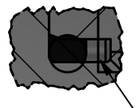

HOUSING FOR SECURE SEALING

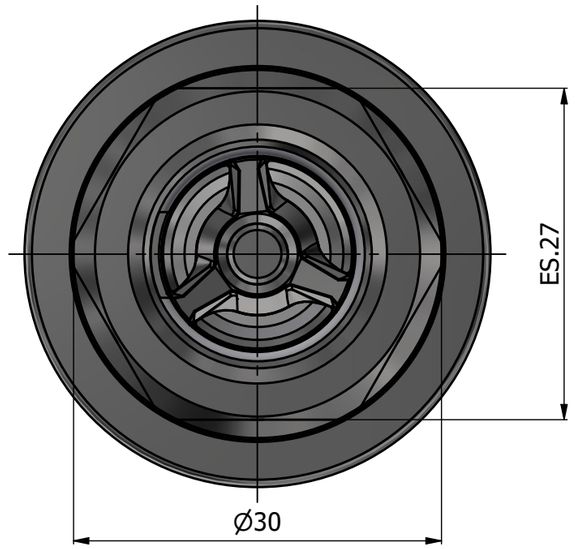

COUPLING TECHNICAL DATA:

- Dimensions and performances comply with requirements of ISO 7241-A
- No shut-off at flow rates up to 190 l/min with fluid ISO VG32 (in according to ISO 3448 standard)
- Maximum valve travel against stop: 0,5mm (in according to ISO 7241)
- Working temperature: -25°C/+125°C
- Maximum working pressure: 35 MPa
- Minimum burst test pressure (coupled and uncoupled): 100 MPa
- Rated flow: 70 l/min
- Pressure drop at flow 70l/min:2,2 bar (220 kPa) to be confirmed
- Spillage:2,1ml
- Force to move coupling sleeve: 90±20 Nm
- Test specifications according to ISO 18869 standard
- Endurance test: impulse test 350000 cycles
- Number of mechanical connections:9000 operations
- Material: AVP (11SMnPb37).
- 12 Latching balls in Cromium steel hardened
- Seals: NBR 80-90 Shore A
- Back-up ring: PTFE
- Component N°2 treated for a greater durability
- Coating material **clear bright zinc**: up to 400 hours
  On request coating material **zinco-nickel**: up to 1000 hours

All of quick couplings are 100% tested after assembly with special machine in order to verify microleakage

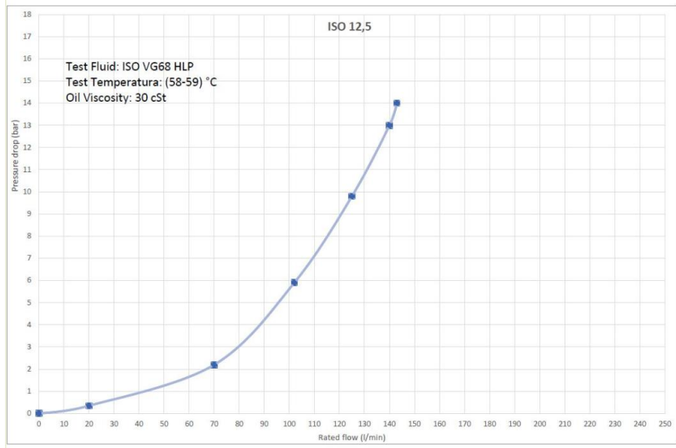

00	PRIMA EMISSIONE	Patelli F.	Facchinetti N.	Patelli F.	29/03/2021
REV	DESCRIZIONE	AUTORE	CONTROLLATO	VERIFICATO	DATA

TOLLERANZA FILETTI THREAD TOLERANCE	MALE 6g - FEMALE 6H	= QUOTA IMPORTANTE = IMPORTANT QUOTE	GENERAL TOLERANCES Medium UNI EN 22768-1		
GEMELS®	RIPRODUZIONE VIETATA SALVO AUTORIZZAZIONE SCRITTA REPRODUCTION PROHIBITED UNLESS AUTHORIZED IN WRITING SMUSSI NON QUOTATI 0,5X45°- RACCORDI NON QUOTATI R0.4mm UNLISTED CHAMFERS 0,5X45°- UNLISTED FITTINGS R0.4mm	PESO WEIGTH 0.296 kg	SCALA SCALE 2: 1	FOGLIO SHEET **1/2**	REV. 02
GEMELS S.p.A. 24069 - TRESCORE BALNEARIO (BG) Via Gambirasio, 20/22 - ITALY Tel.+39-035-940445 Fax +39-035-945205 http://www.gemels.it	TRATTAMENTO SUPERFICIALE - SURFACE TREATMENT	CODICE GREZZO - RAW CODE	FORMATO - SIZE A3		
	TRATTAMENTO TERMICO - HEAT TREATMENT	SOSTITUISCE IL - REPLACE			
	MATERIALE - MATERIAL	TRATTATO A - TREATED BY	DRAWN BY Facchinetti N.	DATE 11/01/2021	
CODICE ARTICOLO - ITEM CODE **NC12G030001**	DESCRIZIONE ARTICOLO - ITEM DESCRIPTION QC PUSH PULL ISO12.5 G1/2				