FLOWFIT®

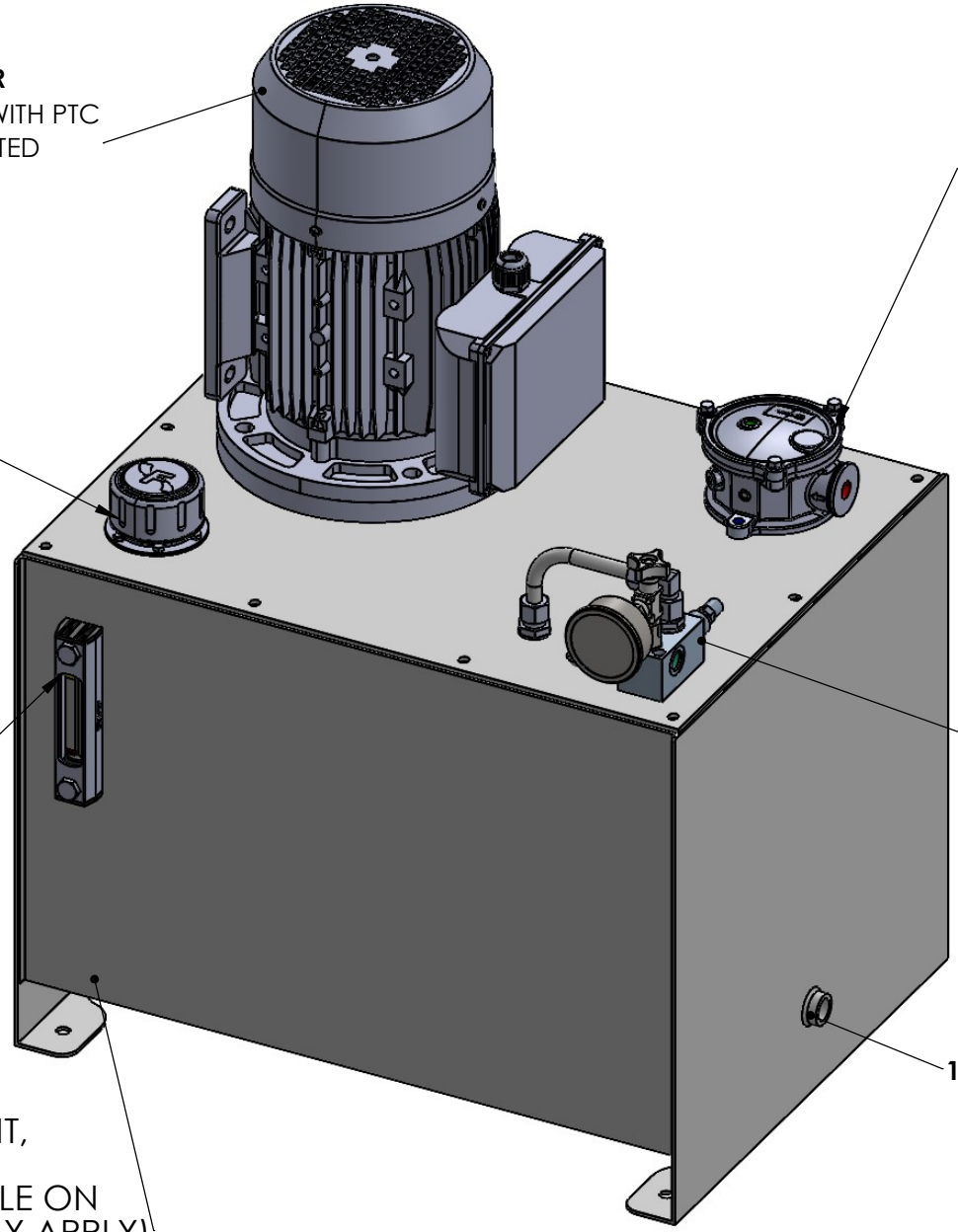

ELECTRIC MOTOR
IE3 EFFICIENCY WITH PTC THERMISTORS FITTED

RETURN FILTER
RETURN FILTER FITTED WITH 10 MICRON FIBREGLASS ELEMENT AND FILTER GAUGE.

FILLER BREATHER
10 MICRON FILLER BREATHER COMES WITH CHAIN AND BASKET

LEVEL INDICATOR
COMPLETE WITH TEMPERATURE GAUGE. THERMOMETER - DOUBLE SCALE 0+80˚C

RELIEF VALVE
COMES WITH GAUGE ISOLATOR AND 63MM PRESSURE GAUGE. SET TO MAX PRESSURE OF VARIATION SELECTED.

1/2 BSP DRAIN PORT

STEEL TANK
OIL AND RUST PROOF PAINT, SPRAYED SATIN BLACK.
OTHER COLOURS AVAILABLE ON REQUEST. (EXTRA COST MAY APPLY)