FLOWFIT® TECHNICAL DATA SHEET

SERIES 30300 MECHANICAL CLUTCH GROUP 2 AND GROUP 3 • 40KW FLOWFIT

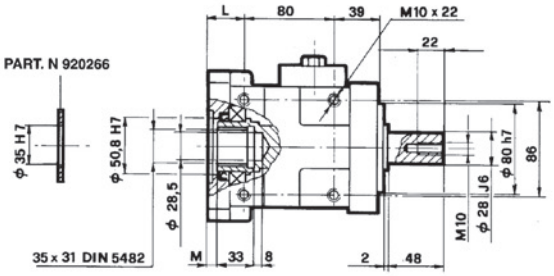

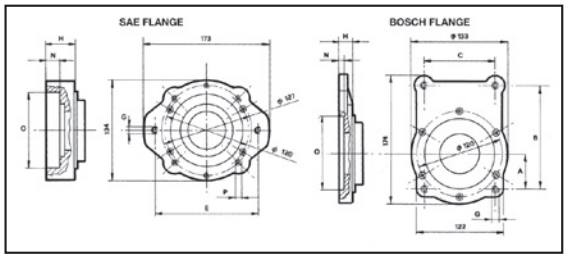

The mechanical couplings with two direction arrows are REVERSIBLE

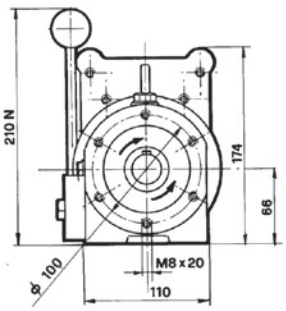

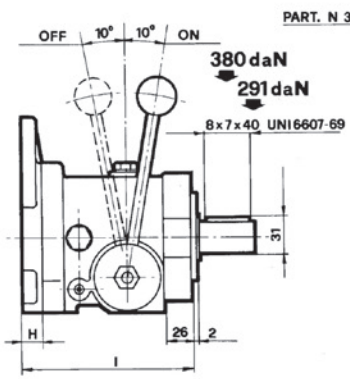

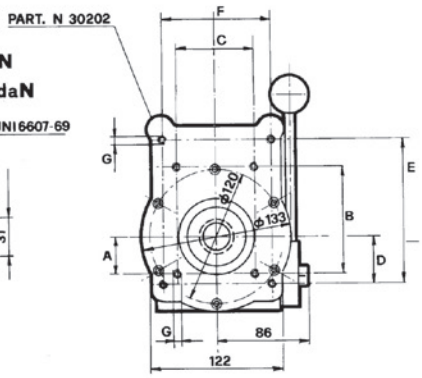

Nominal torque	Max. speed	Max. power output	Axial load
18,5 daNm	**2700 RPM**	**Kw 40**	**160 daN**

PART NUMBER	DIRECTION OF ROTATION	PUMP GROUP	A	B	C	D	E	F	G	H	I	L	M	N	O H7	P
30300 30301 30302	REVERSIBLE CLOCKWISE ANTICLOCKWISE	2-3 30202	32.5	96	71.4	42.5	128	98.4	M8x15	19	151	32	8.6			
30313 30307 30308	REVERSIBLE CLOCKWISE ANTICLOCKWISE	2 BOSCH 30217	34.5	100	72				M8x15	19	151	32	8.6	8.5	80	
30314 30309 30310	REVERSIBLE CLOCKWISE ANTICLOCKWISE	3 BOSCH 30228	48	145	102				M10x15	19.5	151.5	32.5	9.1	9	105	
30311 30303 30304	REVERSIBLE CLOCKWISE ANTICLOCKWISE	SAE A 30203					106.4		M10x22	34	166	47	23.6	15	82.55	
30312 30305 30306	REVERSIBLE CLOCKWISE ANTICLOCKWISE	SAE B 30221					146		M12x22	39	171	52	28.6	20	101.6	M12x22