FLOWFIT® TECHNICAL DATA SHEET

HAND PUMPS

hydraulic diagram

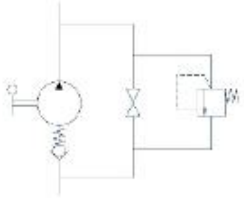

PMO 50 byB-s

with release hand knob
with pressure relief valve
double acting hand pump for single acting cylinder
for fixing to wall

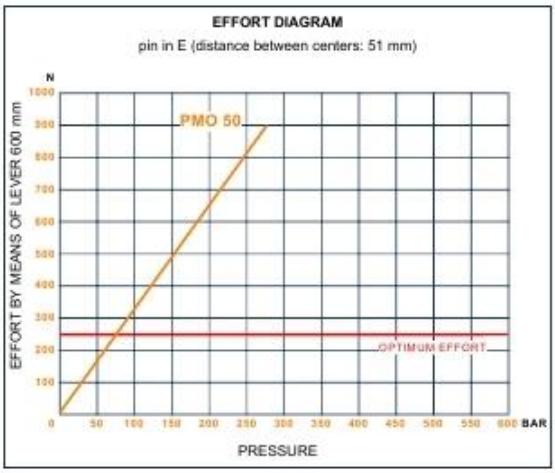

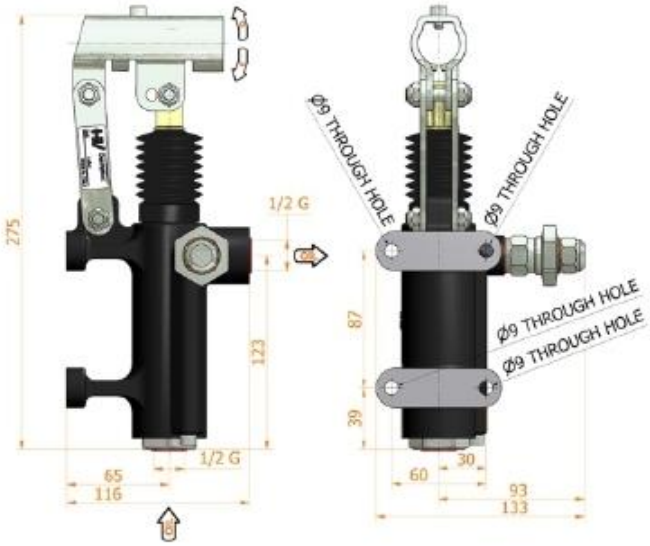

Specifications:

- Cast iron body
- Piston treated with Niploy
- White zinc plated support lever
- Lever connection Ø 27
- White zinc plated external parts
- Standard colour black
- Pressure relief valve standard setting: 100 bar

DISPLACEMENT cm³	A mm	B mm	C mm	D °	E °	ACTUAL DISPLACEMENT cm³	PRESSURE BAR OPTIMAL	PRESSURE BAR MAX	MASS KG	CODE WITHOUT BELLOWS	CODE WITH BELLOWS
50	--	--	--	38	37	43,825	80	280	3,400	6077.0010	6077.0037