FLOWFIT® TECHNICAL DATA SHEET

HV hydraulic quality first

HAND PUMPS

hydraulic diagram

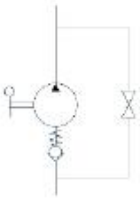

PMO 70 s

with release hand knob
double acting hand pump for single acting cylinder
for fixing to wall

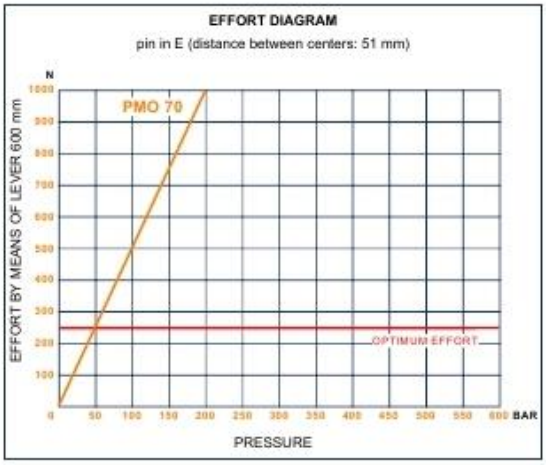

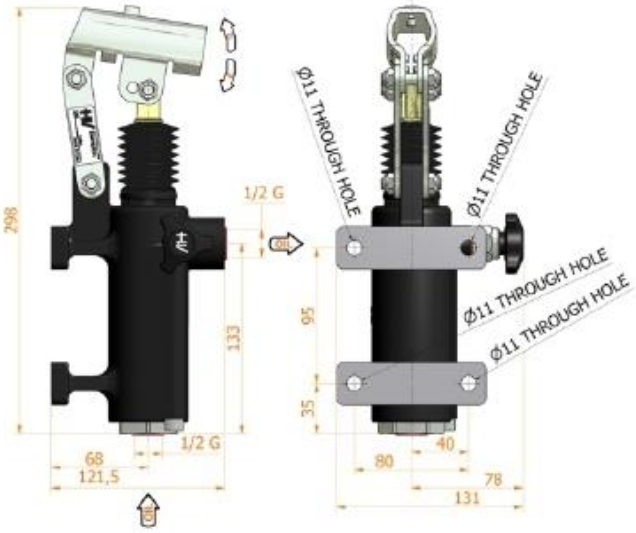

Specifications:

- Cast iron body
- Piston treated with Niploy
- White zinc plated support lever
- Lever connection Ø 27
- White zinc plated external parts
- Standard colour black

DISPLACEMENT cm³	A mm	B mm	C mm	D °	E °	ACTUAL DISPLACEMENT cm³	PRESSURE BAR		MASS KG	CODE WITHOUT BELLOWS	CODE WITH BELLOWS
							OPTIMAL	MAX			
70	--	--	--	45	40	70,233	50	200	5,100	6079.0005	6079.0032