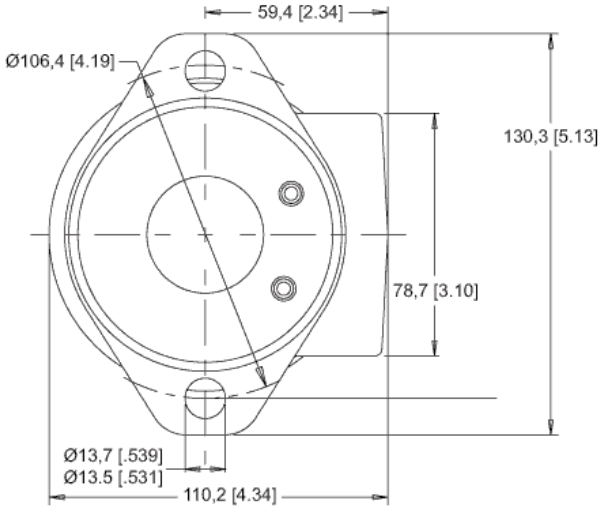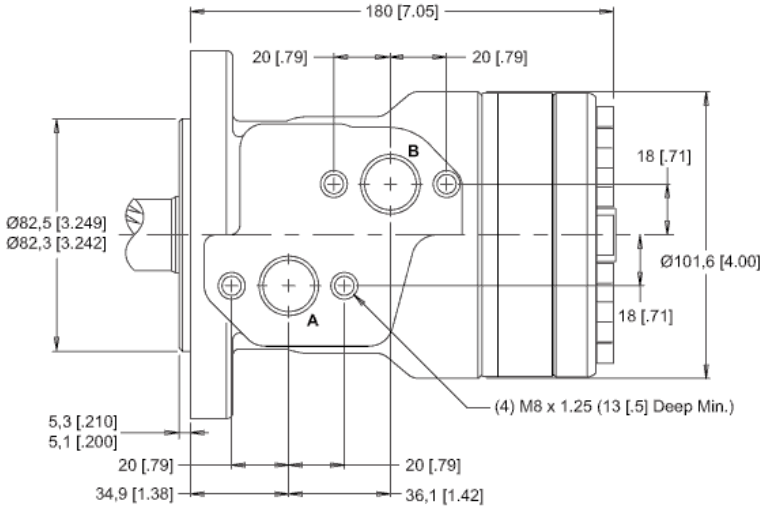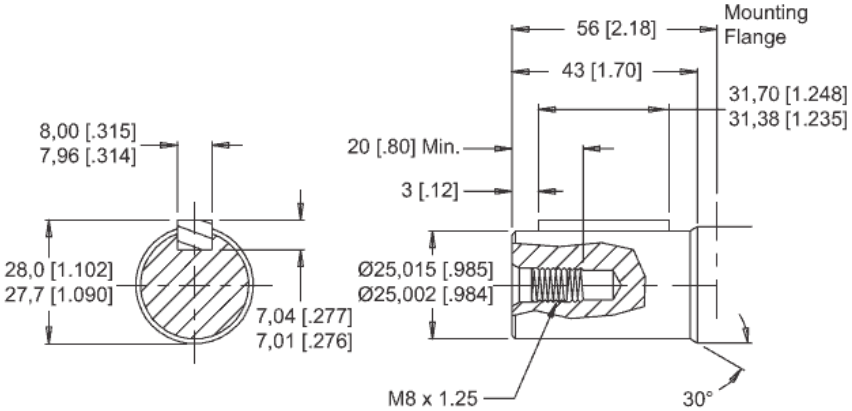MODEL NO.
255240A6312BAAAA