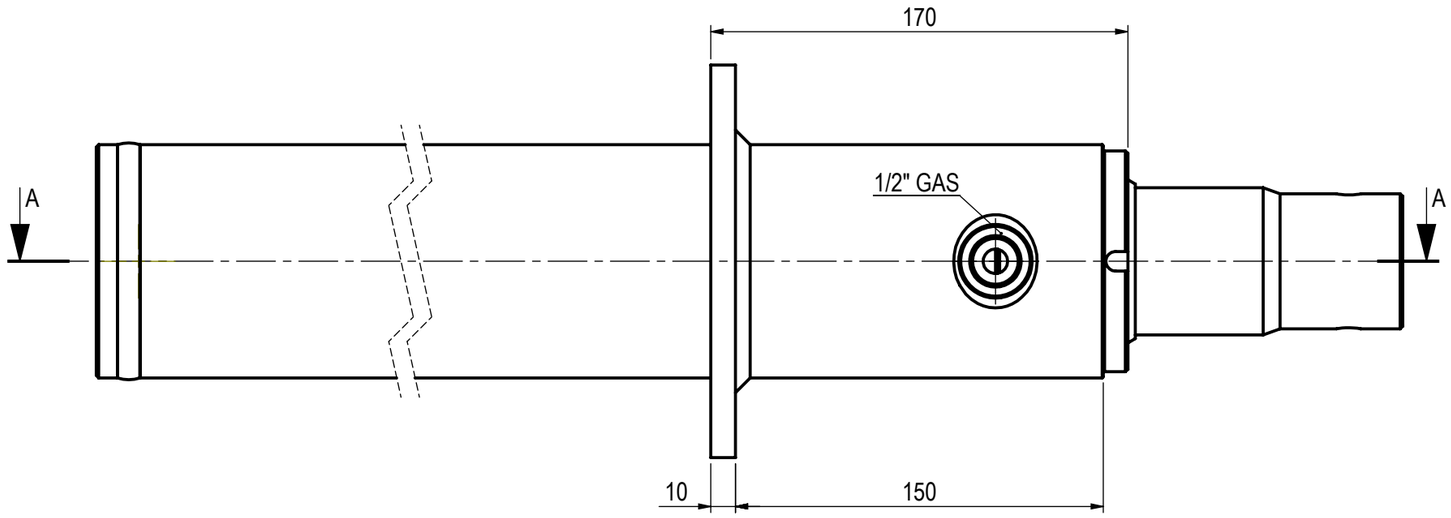

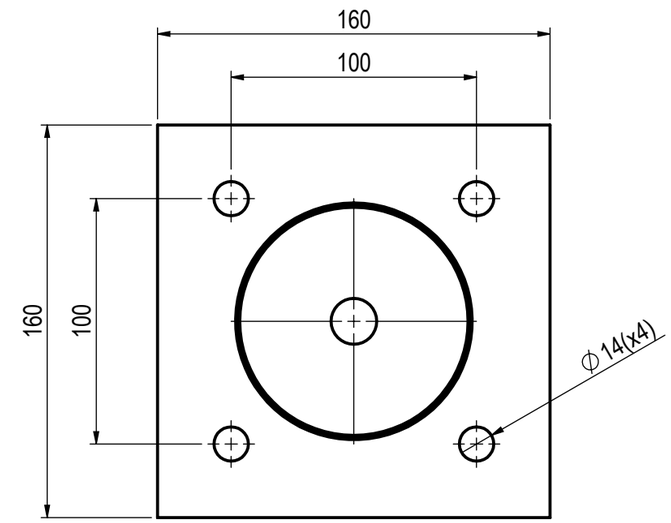

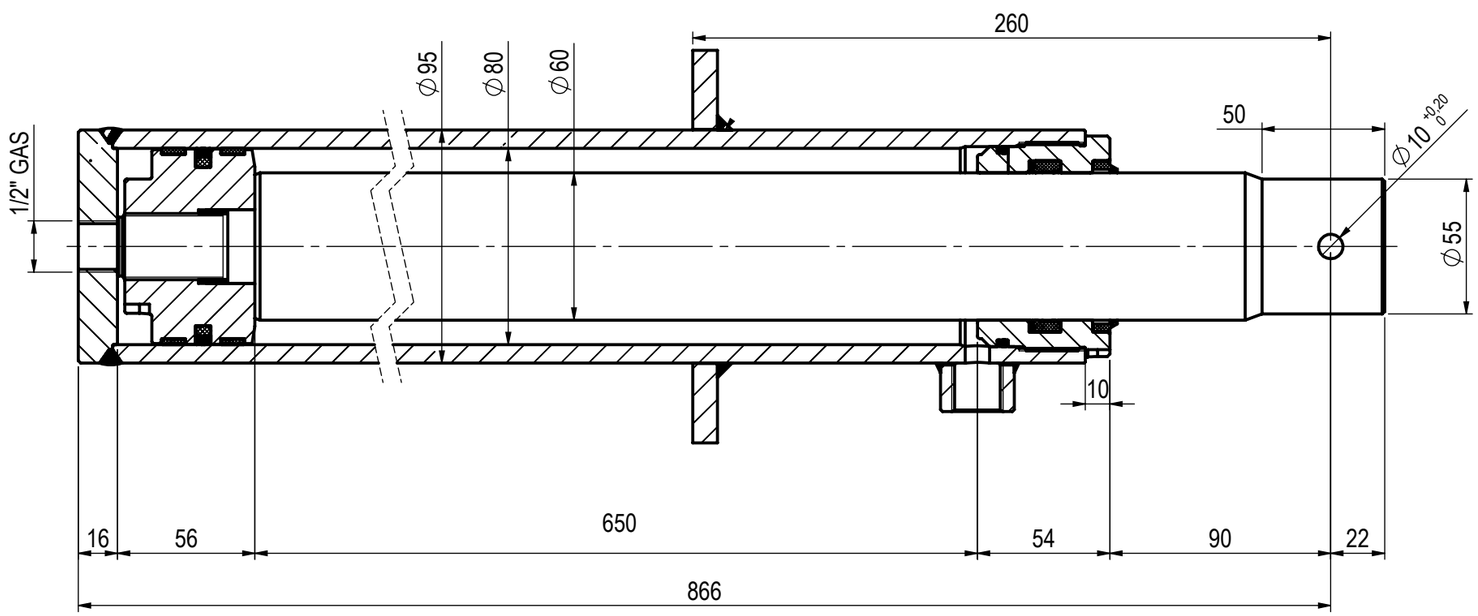

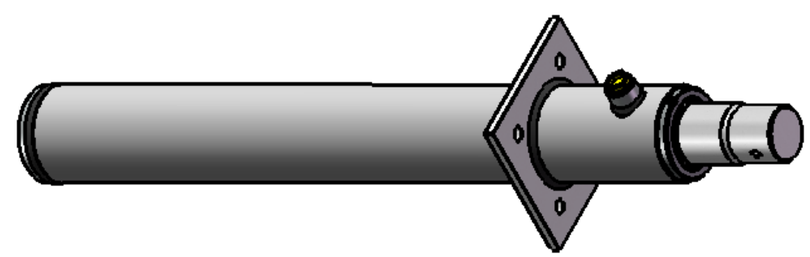

RAC6080650B

FLOWFIT®