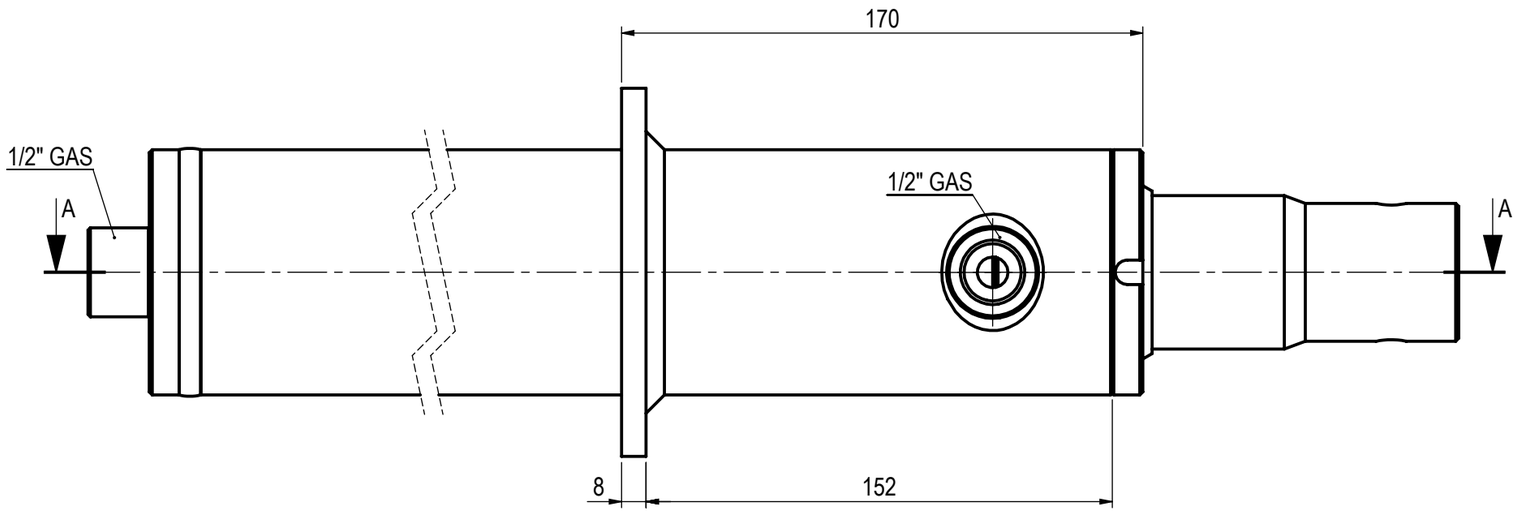

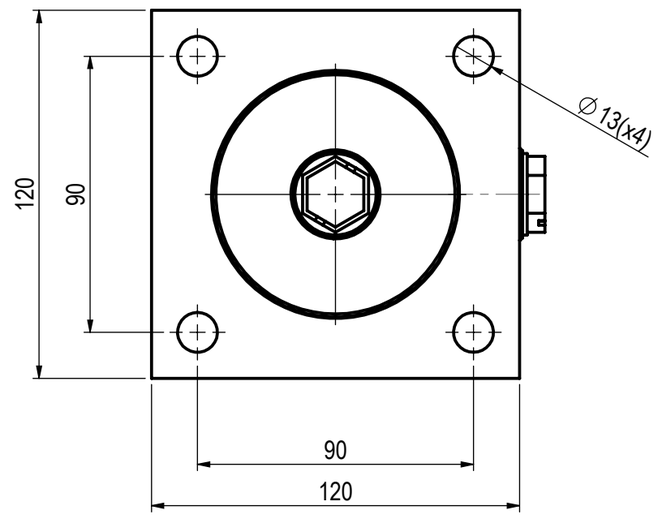

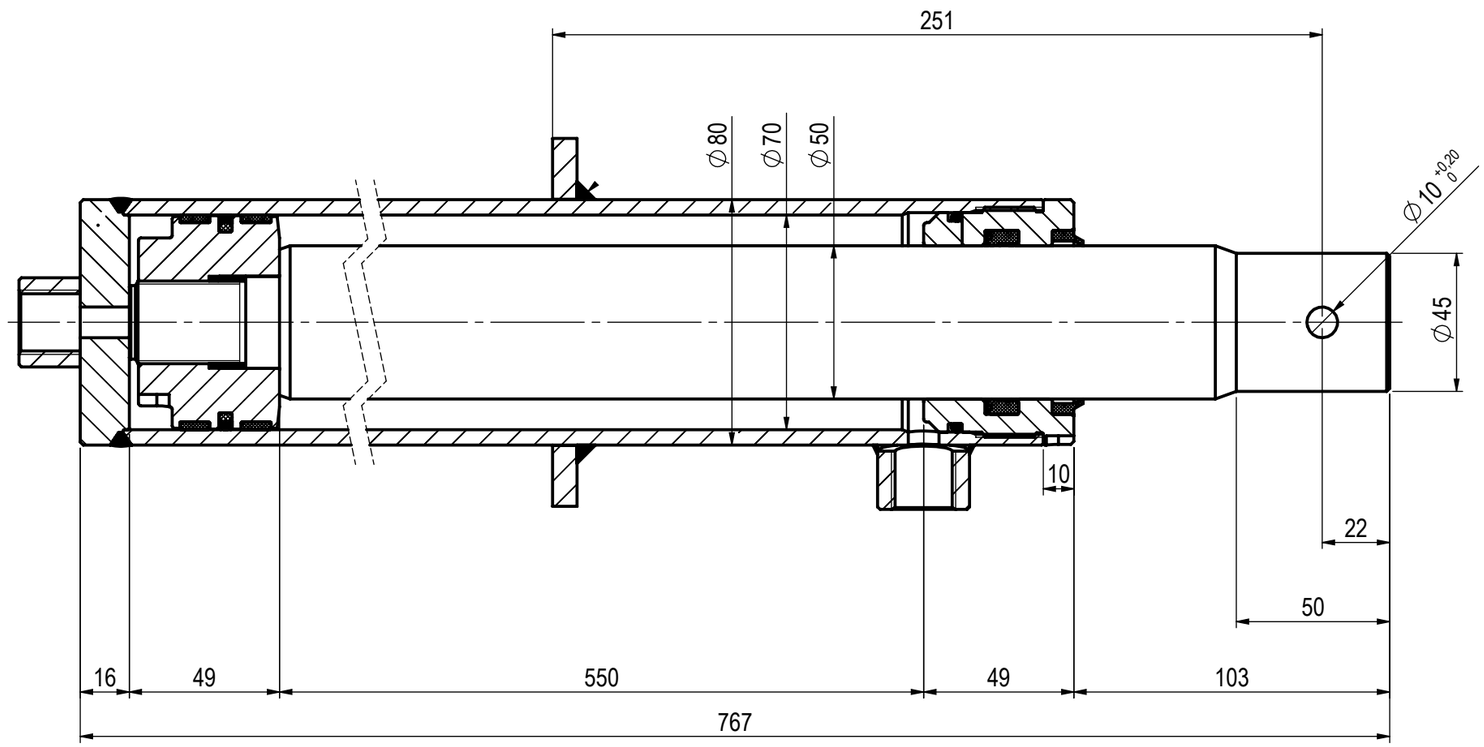

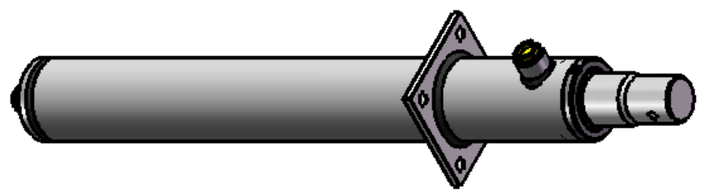

RAC5070550A

FLOWFIT®