FR6 SERIES

Tank top return filters

The FR6 filters are available with various configurations:

- With or without inbuilt air breather
- With 2, 4 or 6 tank mounting holes
- With or without supplementary inlet ports
- Flow rate up to 300 l/min

HOUSING	tested according to NFPA T3.10.5.1*, ISO 10771*, ISO 3968
PRESSURE:	Max operating: 10 bar
CONNECTIONS:	Main ports: G 3/4" to 1 1/4" Additional ports (optional): G 1/2" to 1"
MATERIALS:	Head: aluminium alloy Bowl and top cover: PA6 reinforced Seal: NBR
BYPASS VALVE:	Inbuilt in the filter element B version 1,7 bar C version 3 bar

ELEMENT	tested according to ISO 11170, 2941, 2942, 2943, 3724, 3968,16889, 16908, 23181
FILTER MEDIA:	Inorganic microfiber G06 - G10 - G15 - G25 - G40 Paper: C10 Synthetic: M05 - M10 - M15 Metal wire mesh: T60
COLLAPSE PRESSURE:	10 bar
TEMPERATURE RANGE:	-30°C +100°C
FLUID COMPATIBILITY:	Full with HH-HL-HM-HV HETG-HEES (acc. to ISO 6743/4). For use with other fluid please contact Filtrec Customer Service (info@filtrec.it).

* as reference method only for verifying the pressure fatigue resistance and establishing the burst pressure ratings.

2 MOUNTING HOLES

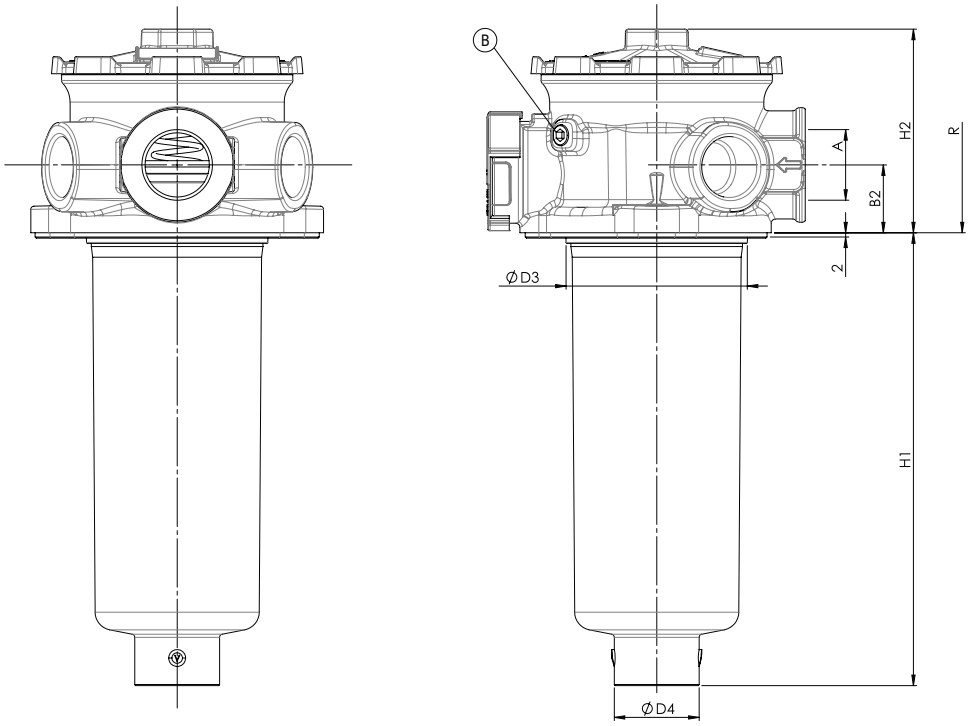

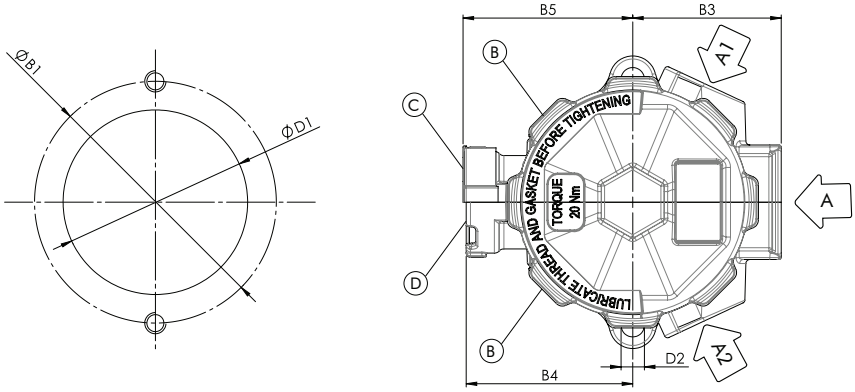

A1+A2= ON REQUEST ONLY
B= INDICATOR PORTS
C= VERSION WITH AIR BREATHER
D= VERSION WITHOUT AIR BREATHER

NOMINAL SIZE

MODEL	A	A1-A2 OPTIONAL	Ø B1	B2	B3	B4	B5	Ø D1	D2	Ø D3	Ø D4	H1	H2	R	WEIGHT Kg
FR62R101	G 3/4"	G 1/2"	84 - 88	26	51	62	64	60 - 64	11	59	25	104	77	200	0,8
FR62R102												168	77	265	0,8
FR62R104												201	77	300	0,9
FR62R120	G 1"	G 1"	114 -116	32	70	78	80	87 - 91	11	86	40	87	96	210	1,0
FR62R122												132	96	260	1,0
FR62R130	G 1 1/4"											214	96	340	1,1
FR62R131												318	96	440	1,2

4 MOUNTING HOLES

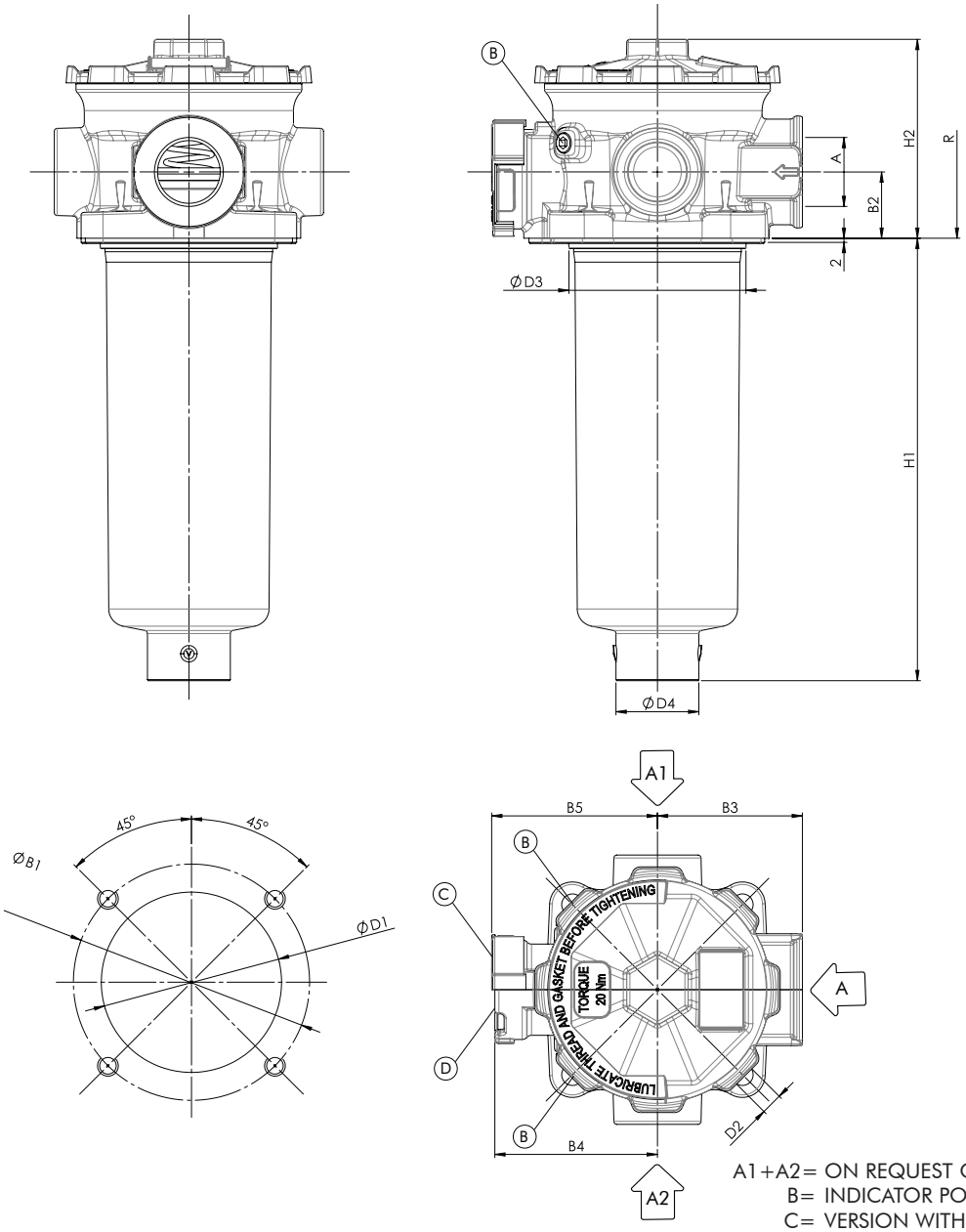

A1+A2= ON REQUEST ONLY
B= INDICATOR PORTS
C= VERSION WITH AIR BREATHER
D= VERSION WITHOUT AIR BREATHER

NOMINAL SIZE

MODEL	A	A1-A2 OPTIONAL	Ø B1	B2	B3	B4	B5	Ø D1	D2	Ø D3	Ø D4	H1	H2	R	WEIGHT Kg
FR64R101	G 3/4"	G 1/2"	84 - 88	26	51	62	64	60 - 64	11	59	25	104	77	200	0,9
FR64R102												168	77	265	0,9
FR64R104												201	77	300	1,0
FR64R120	G 1"	G 1"	114 -116	32	70	78	80	87 - 91	11	86	40	87	96	210	1,1
FR64R122												132	96	260	1,1
FR64R130	G 1 1/4"											214	96	340	1,2
FR64R131												318	96	440	1,3

6 MOUNTING HOLES can fit both 2 or 4 holes tank mounting pattern

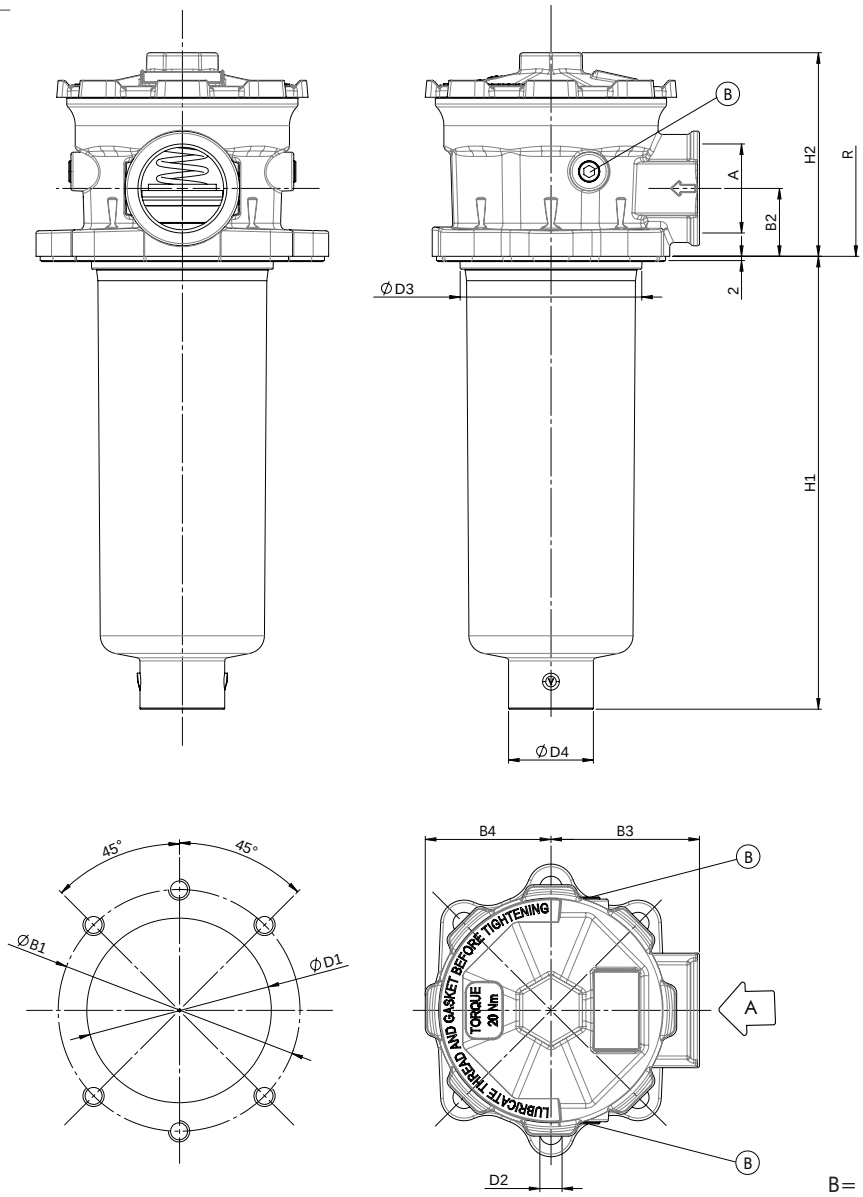

B= INDICATOR PORTS

NOMINAL SIZE

MODEL	A	Ø B1	B2	B3	B4	B5	Ø D1	D2	Ø D3	Ø D4	H1	H2	R	WEIGHT Kg
FR66R120	G 1"	114 -116	32	70	60	80	87-91	11	86	40	87	96	210	1,0
FR66R122											132		260	1,0
FR66R130	G 1 1/4"										214		340	1,1
FR66R131											318		440	1,2

HYDRAULIC SYMBOL

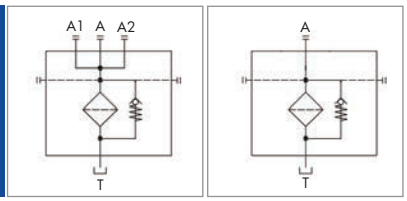

ORDERING INFORMATION

1.	2.	3.	4.	5.	6.	7.	8.	9.	10.	11.	12.
FR6	**2**	**R1**	**30**	**G15**	**C**	**B**	**B6**	**00**	**1**	**B**	**MPB**
SPARE ELEMENT		**R1**	**30**	**G15**	**C**						

1. FILTER SERIES	FR6	
2. TANK MOUNTING HOLES	2	2 holes
	4	4 holes
	6	2 + 4 holes (for size 20-22-30-31)
3. FILTER ELEMENT SERIES	R1	
4. FILTER SIZE	01-02-04	(available for 2 and 4 holes version only)
	20-22-30-31	
5. FILTER MEDIA	G06	glassfiber $ß_{7\mu m(c)} > 1.000$
	G10	glassfiber $ß_{12\mu m(c)} > 1.000$
	G15	glassfiber $ß_{17\mu m(c)} > 1.000$
	G25	glassfiber $ß_{22\mu m(c)} > 1.000$
	G40	glassfiber $ß_{35\mu m(c)} > 1.000$
	C10	paper $ß_{10\mu m(c)} > 2$
	T60	wire mesh 60 μm
	M05	synthetic $ß_{10\mu m(c)} > 1.000$
	M10	synthetic $ß_{15\mu m(c)} > 1.000$
	M15	synthetic $ß_{20\mu m(c)} > 1.000$
6. BYPASS VALVE	B	1,7 bar (for paper and wire mesh elements)
	C	3 bar (for glassfiber elements)
7. SEALS	B	NBR
8. MAIN PORT	B4	G 3/4" (for size 01-02-04)
	B5	G 1" (for size 20-22-30-31)
	B6	G 1 1/4" (for size 20-22-30-31)
9. ADDITIONAL PORTS	00	no additional port
	B3	2 x G 1/2 (for size 01-02-04)
	B5	2 x G 1 (for size 20-22-30-31)
10. INBUILT AIR BREATHER	0	no air breather
	1	with air breather (not for FR66)
11. INDICATOR PORTS	B	2 x G 1/8"
12. CLOGGING INDICATORS	000	without indicator
	MPB	pressure gauge (for "B" bypass)
	MPC	pressure gauge (for "C" bypass)
	PDB	pressure switch (for "B" bypass)
	PDC	pressure switch (for "C" bypass)
ACCESSORIES	LC24	LED connector for pressure switch
The accessories must be ordered separately	DS350	dipstick (not available for 2 holes version)
	ET0250	extension tube 250 mm long (for size 01-02-04)
	ET0500	extension tube 500 mm long (for size 01-02-04)
	ET2250	extension tube 250 mm long (for size 20-22-30-31)
	ET2500	extension tube 500 mm long (for size 20-22-30-31)
	CT2250	connection tube 250 mm long (for size 20-22-30-31)
	DF040	diffuser Ø 40 mm (for size 20-22-30-31)
	B610F03	spare air breather

PRESSURE DROP (Δp) INFORMATION FOR FILTER SIZING

The total Delta P through a filter assembly is given from Housing Δp + Element Δp.
The max recommended total Δp for return filters is 0,4 – 0,6 bar with clean element.
For multiport versions, the housing Δp to be considered is the sum of the Δp through all the ports that can be used contemporarily.

N.B. All the reported data have been obtained at our laboratory, according to specification ISO3968 with mineral oil having 32 cSt viscosity at 40°C and density 0,875 kg/dm^3.

HOUSING PRESSURE DROP

The housing Δp is given by the curve of the considered model and port, in correspondence of the flow rate value.

FR6x R101-02-04

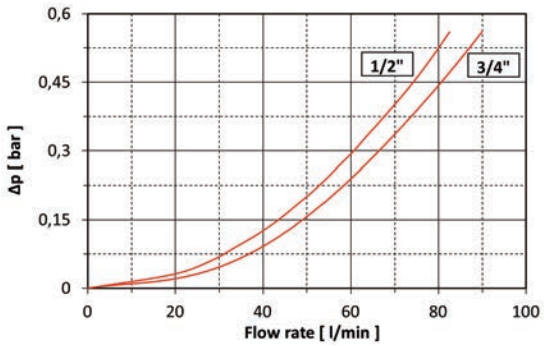

FR6x R120-22

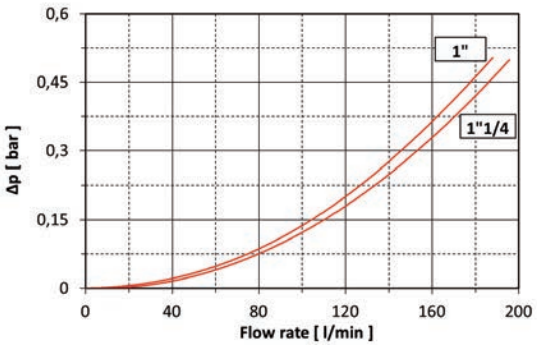

FR6x R130-31

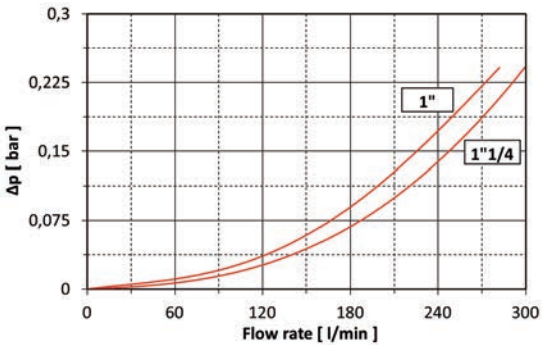

ELEMENT PRESSURE DROP

The element Δp (bar) is given by the flow rate (l/min) multiplied by the factor in the table here below corresponding to the selected media and divided by 1000.
If the oil has a viscosity V_1different than 32 cSt a corrective factor $V_1/32$ must be applied.
Example: 80 l/min with R130G10B and oil viscosity 46 cSt > 80 x 3,19/1000 x 46/32 = 0,36 bar

	G06	G10	G15	G25	G40	C10	T60	M05	M10	M15
R101	26,84	15,20	10,04	8,37	4,32	4,59	2,43	9,94	8,49	5,30
R102	13,16	8,22	4,94	4,55	2,63	2,88	0,82	5,37	4,59	3,03
R104	10,96	6,41	4,00	3,82	2,02	2,45	0,79	4,27	3,65	1,79
R120	13,85	8,65	6,44	6,32	2,77	4,09	0,86	5,65	4,83	3,19
R122	7,80	5,27	3,92	3,60	1,55	2,70	0,76	3,83	3,27	1,79
R130	5,09	3,19	2,25	2,06	0,90	1,64	0,49	2,31	1,98	1,02
R131	3,34	1,94	1,37	1,26	0,46	1,06	0,24	1,41	1,20	0,63

EXAMPLE OF TOTAL Δp CALCULATION

FR62**R130**G10BB**B6**001B000 with **80** l/min and oil **46** cSt:
Housing Δp 0,01 bar + element Δp 0,36 bar (80 x 3,19/1000 x 46/32) = total assembly Δp 0,37 bar

BYPASS VALVE PRESSURE DROP

The bypass valve Δp is given by the curve of the considered model and setting, in correspondence of the flow rate value.

FR6x R101-02-04

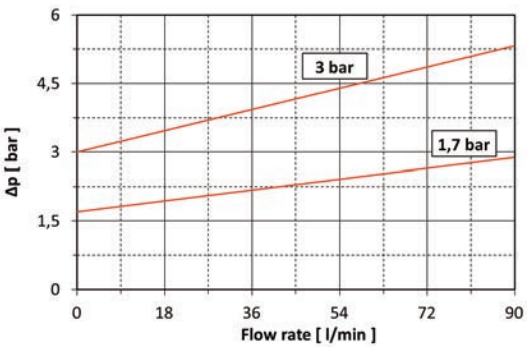

FR6x R120-22-30-31

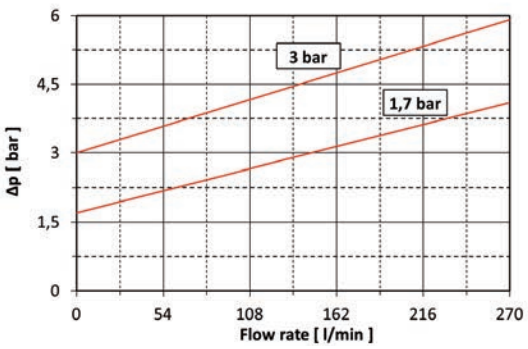

ACCESSORIES

These accessories fit all our standard models and must be ordered separately.

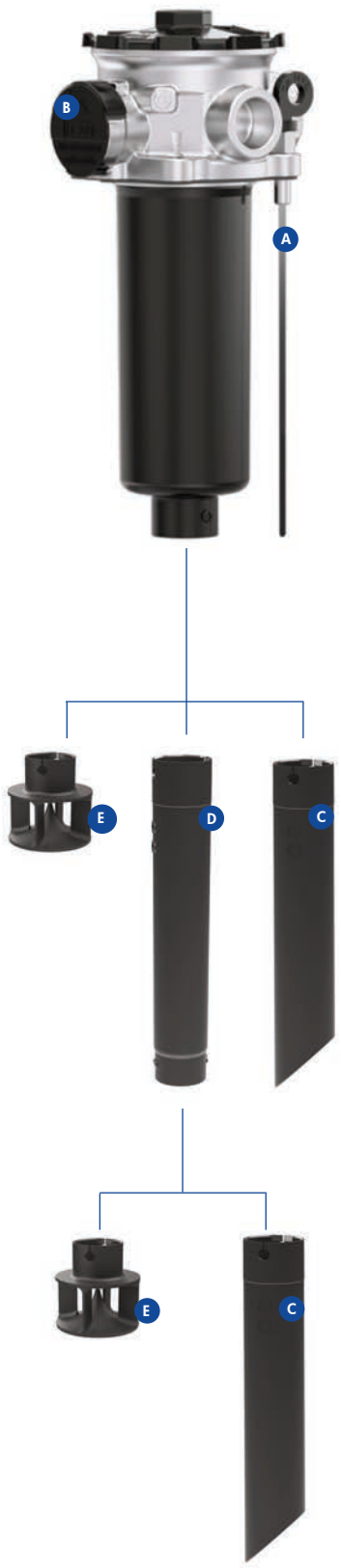

A * DIPSTICK for oil level detection

When reduced space available, one of the tank fixing hole can be used for a dipstick to check the oil level; it is supplied with a M10 bolt support.

* not available for 2 holes version

DS350	dipstick 350 mm long

B AIR BREATHER

PART NR.	FILTRATION	FLOW RATE	Δp
B610F03	3 μm	up to 300 Nl/min	50 mbar

N.B. we recommend to replace the air breather when replacing the oil filter element.
(when working in a very dirt environment, a more frequent air breather replacement could be necessary)

C EXTENSION TUBE

The flow from the filter must come out below the oil level to avoid possible generation of free air or foam.
When necessary an extension tube can be fitted onto the knobs of the bowl end.

for size 01-02-04

ET0250	extension tube 250 mm long
ET0500	extension tube 500 mm long

for size 20-22-30-31

ET2250	extension tube 250 mm long
ET2500	extension tube 500 mm long

D CONNECTION TUBE

Connection tube is the necessary device between filter bowl and extension tubes (ET2250/ET2550) and/or diffuser (DF040). Its plug and play option makes it easy to install and versatile.

for size 20-22-30-31

CT2250	connection tube 250 mm long

E DIFFUSER

Diffuser is an effective way to reduce foaming and turbulence normally caused by return lines. Plug and play option to be directly installed on the filter bowl or to connection tube (CT2250). Installation of a diffuser in the hydraulic tank is an easy way to ensure the reliability of the overall system.
Diffuser must always be installed below the minimum oil level.

for size 20-22-30-31

DF040	diffuser Ø 40 mm

USER TIPS

1. COVER
2. SPRING
3. O-RING
4. FILTER ELEMENT
5. FILTER BOWL
6. FILTER HEAD
7. SHAPED GASKET
8. AIR BREATHER

SPARE SEALS KIT	
	NBR
FR6-2-R1-0x	06.021.00256
FR6-4-R1-0x	06.021.00257
FR6-2-R1-2x/3x	06.021.00258
FR6-4-R1-2x/3x	06.021.00259
FR6-6-R1-2x/3x	06.021.00260

COVER TIGHTENING TORQUE
20 Nm

INDICATOR TIGHTENING TORQUE
10 Nm

WARNING

⚠ Make sure that Personal Protective Equipment (PPE) is worn during installation and maintenance operation.

DISPOSAL OF FILTER ELEMENT

⚠ The used filter elements and the filter parts dirty of oil are classified as "Dangerous waste material": they must be disposed according to the local laws by authorized Companies.

INSTALLATION

1. the gasket (7) must be properly positioned and the head (6) well secured on the tank lid through the fixing holes
2. the hose must be properly connected to the IN port
3. ⚠ the OUT port must be clear (an extension tube could be fitted, if needed for having the outlet below the oil level)
4. verify that no tension is present on the filter after mounting
5. when present the air breather (8), it must be in a protected position
6. enough space must be available for filter element replacement
7. the visual clogging indicator must be in a easily viewable position
8. when a electrical indicator is used, make sure that it is properly wired
9. keep in stock a spare FILTREC filter element for timely replacement when required

OPERATION

⚠

1. the filter must work within the operating conditions of pressure, temperature and compatibility given in the first page of this data sheet
2. the filter element must be replaced as soon as the clogging indicator signals at working temperature (in cold start conditions, oil temperature lower than 30°C, a false alarm can be given due to oil viscosity)
3. If no clogging indicator is mounted, replace the element according to the system manufacturer's recommendations

MAINTENANCE

⚠

1. before removing the cover (1), ensure that the system is switched off and there is no residual pressure in the filter
2. unscrew the cover (1) by turning it anti-clockwise and remove it
3. remove the spring (2) first, then the dirty element (4) and the bowl (5)
4. clean the bowl (5) and fit a new FILTREC element (4), verifying the part number, particularly concerning the micron rating
5. when fitting the new element (4), open its plastic protection on the open end side and insert it onto the spigot in the filter bowl, then remove completely the plastic protection
6. check the O-ring (3) conditions and replace if necessary
7. put the spring (2) in its position on the filter element
8. screw the cover (1) by turning it clockwise, tighten at the recommended torque
9. ⚠ the used filter elements cannot be cleaned and re-used

FILTREC®